A	Suction Water Massage Pump 1	∅63 FEMALE SOCKET
B	Suction Water Massage Pump 2	∅63 FEMALE SOCKET
C	Suction Water Massage Pump 3	∅63 FEMALE SOCKET
D	Return Water Massage Pump 1	∅63 FEMALE SOCKET
E	Return Water Massage Pump 2	∅63 FEMALE SOCKET
F	Return Water Massage Pump 3	∅63 FEMALE SOCKET
G	Suction Filtration Pump	∅50 FEMALE SOCKET
H	Return Filtration Pump Inlets	∅50 FEMALE SOCKET
I	Filter pump suction vacuum cleaner	∅50 FEMALE SOCKET
J	Spa Drain	∅50 FEMALE SOCKET

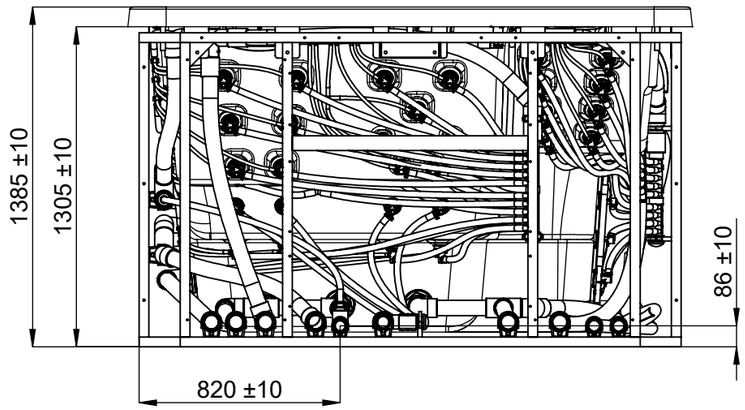

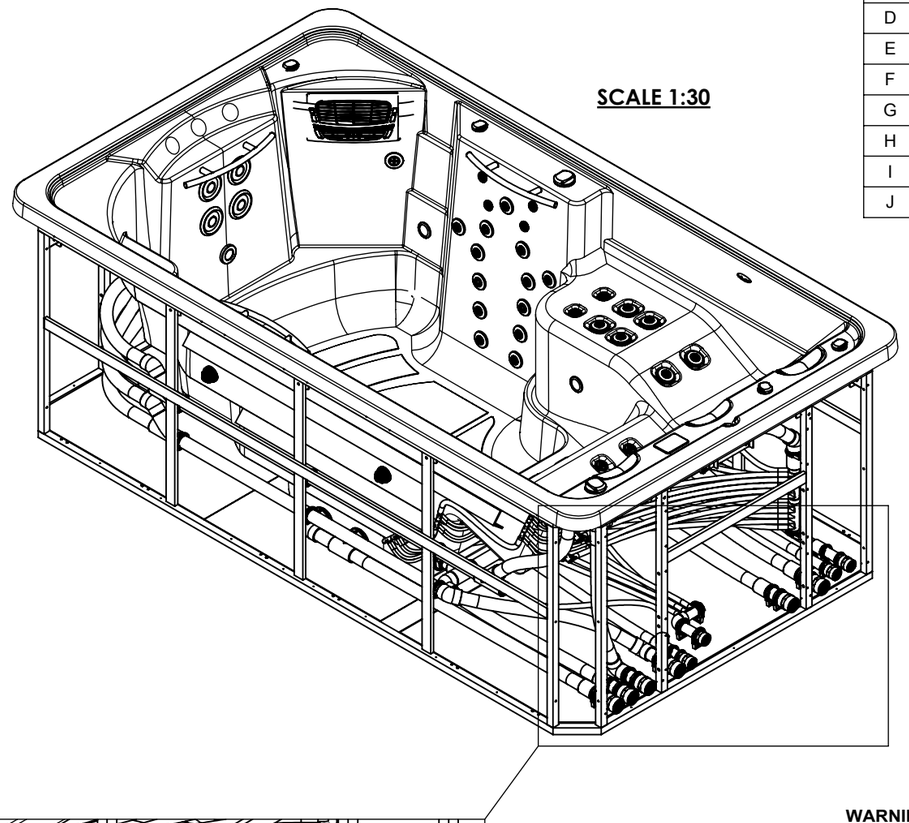

SCALE 1:30

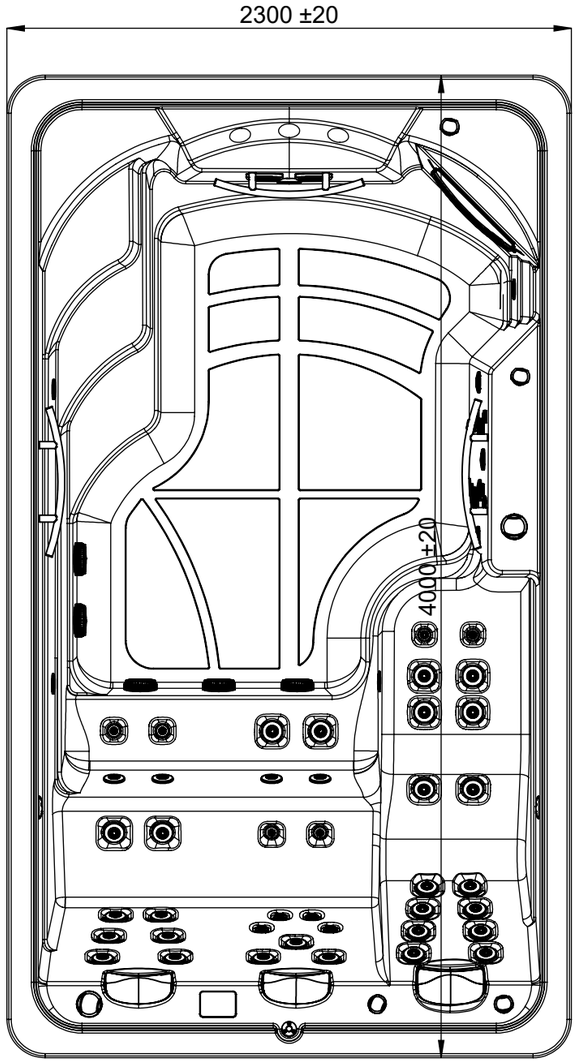

HYDRAULIC CONNECTIONS ACCESS

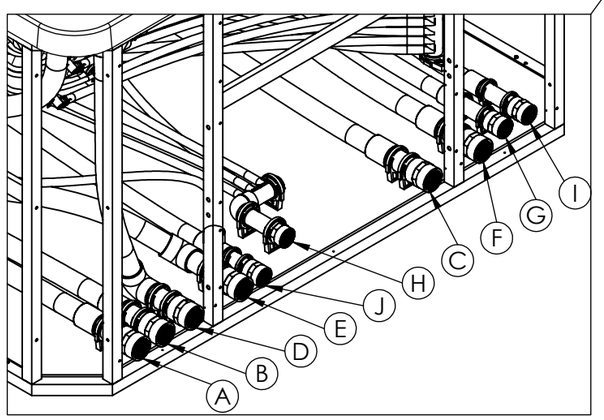

SCALE 1:18

WARNING:
It's essential to keep a minimum clearance access of **700mm** all around.

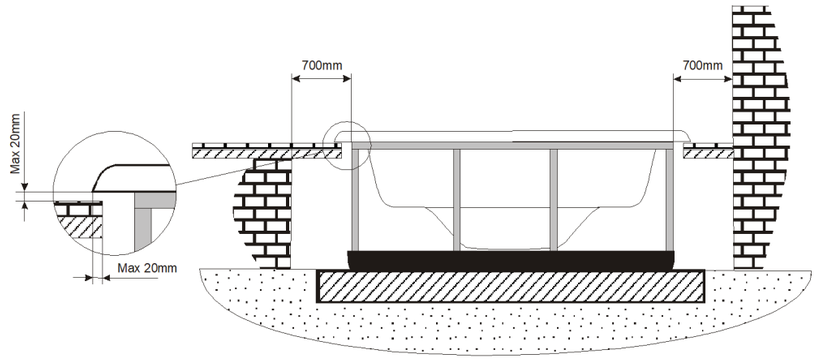

According to our policy of continuous improvement, dimensions, features or components of this product can be partially or completely changedwithout prior notice.
It's Customer responsibility to verify that this is the last version of the drawing

General specifications	
Spa weight (empty)	1.150 Kg
Spa weight (full)	7.150 Kg

Change No.	Date	Name	Modification
05	26/08/2020	ERDS(OF)	Changes due to new spa tub design
04	09/01/2019	D.Castillo	Spa weight added.
03	12/11/2018	A.Miquel	Jets (CMP) changed
02	10/05/2017	O. Faura	Changing of electronic parts references.
06	05/06/2021	CF	Hydraulic changes

Remarks
Dimensions in mm. General Tolerances +/- 10mm

COMMERCIAL

Drawn	06/12/2016	I.Pozo	IBERSPA	Part Number	Rev.
Checked	06/12/2016	V.Saiz		67587-AV	06
Scale 1:25	General Tolerance DIN 7168 ISO 2768g				First Angle Projection
Sheet 1/1					

Property of IBERSPA S.L. Avda. Plà d'Urgell 2-8 25200 Cervera, Spain. Don't use without permission. Keep this information confidential and use it solely for the permitted purpose.