General specifications	
Spa weight (dry)	800 kg
Spa weight (filled)	2800 kg

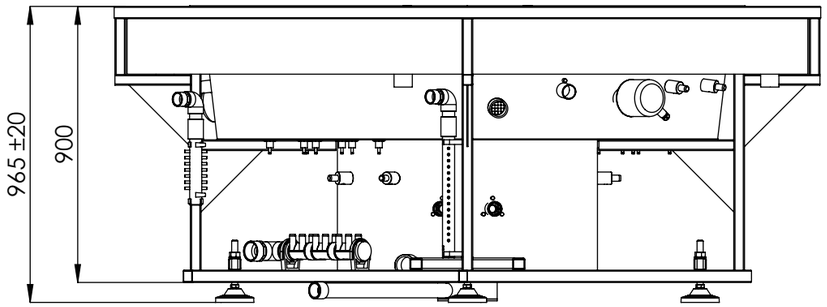

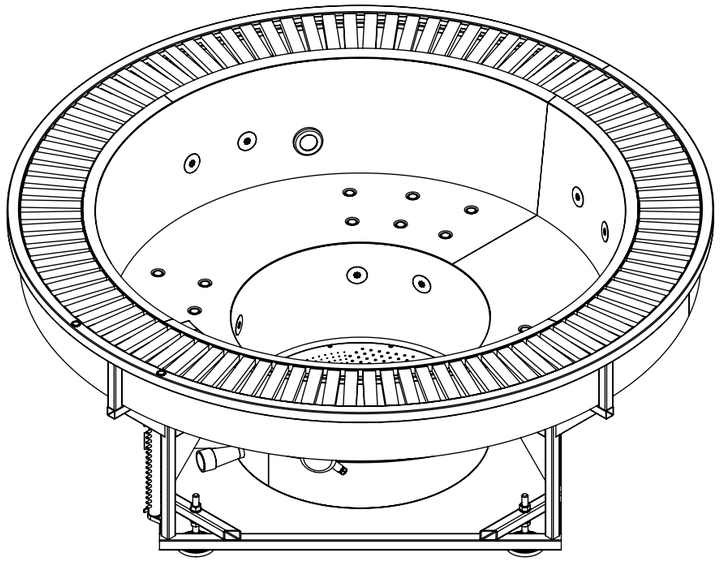

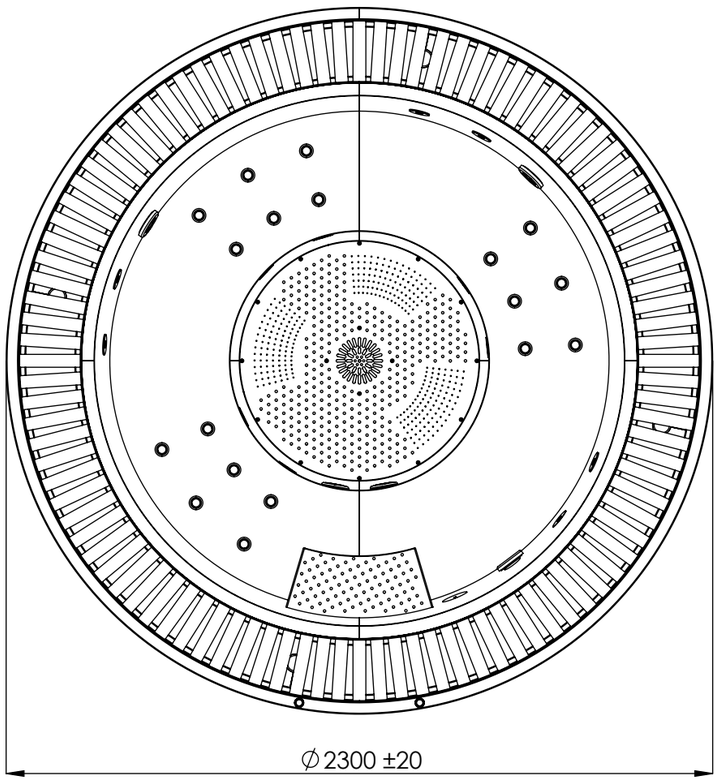

WARNING:
It's essential to keep a minimum clearance access of **700mm** all around. Minimum depth of spa hole **920** mm.

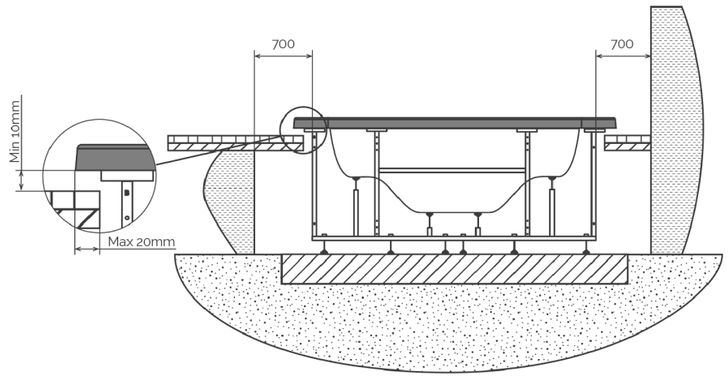

According to our policy of continuous improvement, dimensions, features or components of this product can be partially or completely changedwithout prior notice.
It's Customer responsibility to verify that this is the last version of the drawing.

Revision *Revisión*	Date *Fecha*	Name *Nombre*	Modification *Modificación*

Dimensions in mm. General Tolerances +/- 10mm

COMMERCIAL PUBLIC RANGE

	Date	Name
Drawn	05/05/2025	Paula S.
Checked	06/05/2025	Bernat S.
Scale 1:20	General Tolerance DIN 7168 ISO 2768g	
Sheet 1/1		

iberspa

Code: 43723

Rev.: 00

Size A3

First Angle Projection

Property of IBERSPA S.L. Avda. Plà d'Urgell 2-8 25200 Cervera, Spain. Don't use without permission. Keep this information confidential and use it solely for the permitted purpose.